EE105 – Fall 2015
Microelectronic Devices and Circuits

Prof. Ming C. Wu

wu@eecs.berkeley.edu

511 Sutardja Dai Hall (SDH)

Transistor Operating Mode in Amplifiers

- **Transistors are biased in flat part of the I-V curves**
  - **Saturation mode for MOSFET, and active mode for BJT**
    - **MOSFET: channel pinched off at drain**
    - **BJT: base-collector junction reverse-biased**
  - **Drain (collector) voltage can vary without changing current**

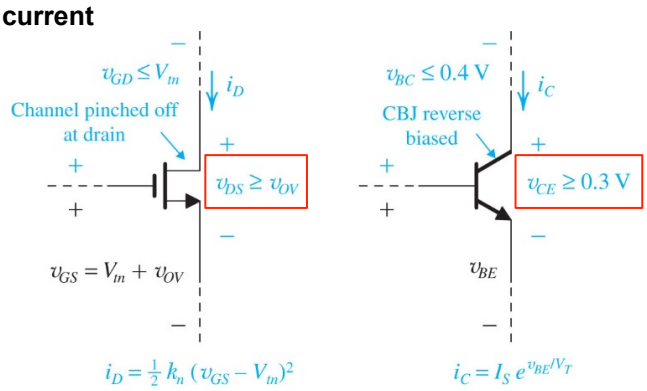

Voltage Transfer Curves

$$i_D = \frac{1}{2}k_n(v_{GS} - V_{tn})^2$$

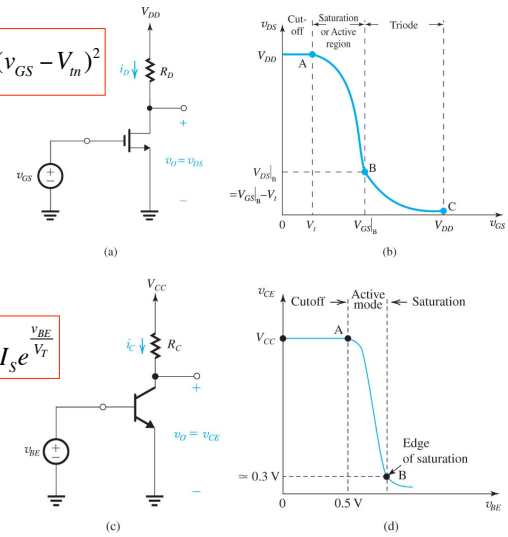

$$i_C = I_S e^{\frac{v_{BE}}{V_T}}$$

- Transistors are transimpedance amplifiers
  - MOSFET: v_{GS} controls i_D
  - BJT: v_{BE} controls i_C
- Adding load resistors converts current to voltage → voltage amplifiers
  - Drain (collector) voltage free to change in saturation (active) mode

Voltage Amplifier

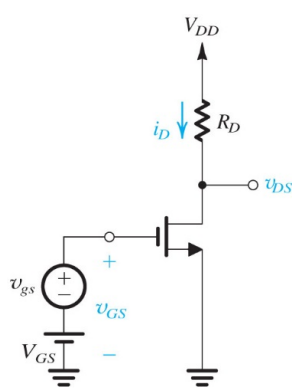

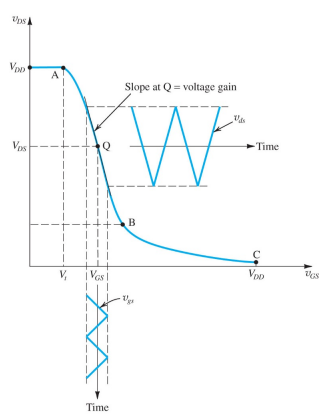

- DC bias at Q point (Quiescent point)
- Small-signal input superimposed on DC bias voltage

$$v_{DS} = V_{DD} - \frac{1}{2}k_n\left(v_{GS} - V_t\right)^2 R_D$$

$$A_V = \left.\frac{dv_{DS}}{dv_{GS}}\right|_Q = -k_n\left(v_{GS} - V_t\right)R_D$$

Voltage Gain: $A_V = -k_n V_{OV} R_D$

Maximum Input Signal Amplitude

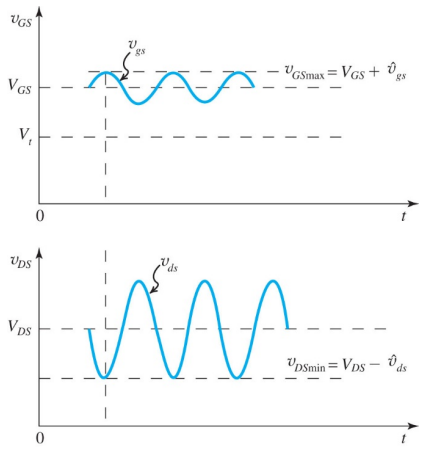

To keep the MOSFTET in Saturation region (linear part of I-V curve):

$v_{DS} \geq v_{OV} = v_{GS} - V_t$ at all time.

This condition is met if

$$v_{DS\min} = V_{DS} - v_{ds} \geq v_{GS\max} - V_t = V_{GS} + v_{gs} - V_t$$

Since $v_{ds} = |A_V| v_{gs}$

$$V_{DS} - |A_V| v_{gs} \geq V_{GS} + v_{gs} - V_t$$

$$v_{gs} \leq \frac{V_{DS} - V_{OV}}{1 + |A_V|}$$

The input amplitude must be smaller than this value to ensure MOSFET stays in Saturation

BJT Amplifier

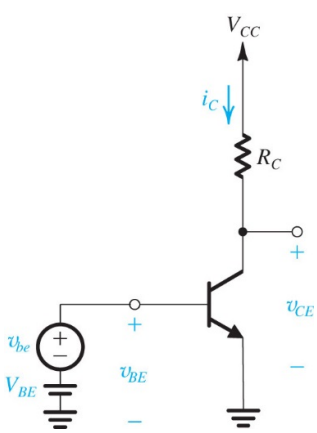

$$v_o = v_{CE} = V_{CC} - i_C R_C$$

$$i_C = I_S e^{\frac{v_{BE}}{V_T}}$$

$$A_V = \left.\frac{dv_{CE}}{dv_{BE}}\right|_Q = -\left(\frac{I_C}{V_T}\right) R_C$$

$$A_V = -\frac{I_C R_C}{V_T}$$

Note $I_C R_C = V_{CC} - V_{CE}$

and $V_{CE} \geq 0.3$ for BJT in Active region

$$|A_{V\max}| = \frac{V_{CC} - 0.3}{V_T}$$

Graphical Analysis with Load Line

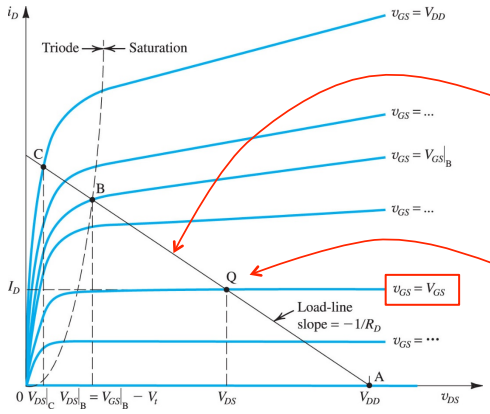

KVL:

$V_{DD} = i_D R_D + v_{DS}$

This is the equation for load line

The intersection of load line and MOSFET I-V (with a specific v_{GS}) defines the bias point (Q)

Consideration for Bias Point

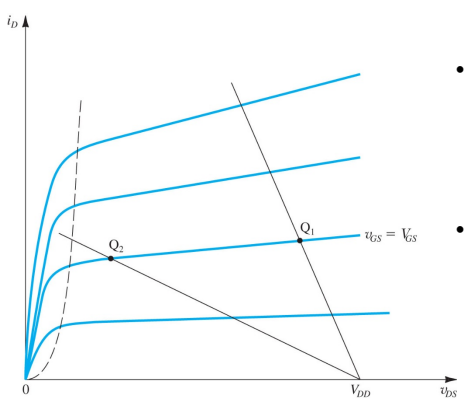

- **Q_1 : too close to V_{DD}**
  - **Not enough room for positive signal swing**
- **Q_2 : too close to Triode region**
  - **Not enough room for negative voltage swing**

Small-Signal Model for MOSFET

Hybrid-π Model

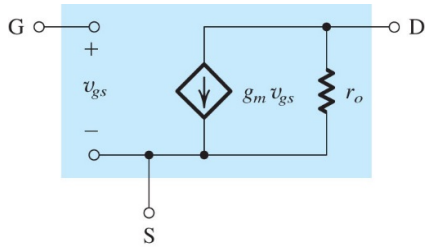

The equivlent circuit is valid for both NMOS and PMOS.

In PMOS, use absolute sign for all parameters:
$|V_{GS}|$, $|V_t|$, $|V_{OV}|$, $|V_A|$,
and replace k_n with k_p

$$i_D(v_{GS}, v_{DS}) = \frac{1}{2}k_n\left(v_{GS} - V_t\right)^2\left(1 + \frac{v_{DS}}{V_A}\right)$$

At DC bias point, Q

$$i_D = I_D + \left.\frac{\partial i_D}{\partial v_{GS}}\right|_Q v_{gs} + \left.\frac{\partial i_D}{\partial v_{DS}}\right|_Q v_{ds}$$

$$i_D = I_D + g_m v_{gs} + \frac{1}{r_o}v_{ds}$$

Transconductance:

$$g_m = k_n\left(v_{GS} - V_t\right)\left(1 + \frac{v_{DS}}{V_A}\right) \approx k_n\left(v_{GS} - V_t\right)$$

$$g_m = k_n V_{OV} \quad \text{(Alternative: } g_m = \frac{2I_D}{V_{OV}}\text{)}$$

Output Resistance:

$$r_o = \frac{V_A}{I_D} \quad \text{(in MOSFET: } r_o = \frac{1}{\lambda I_D}\text{)}$$

Applying Small-Signal Model

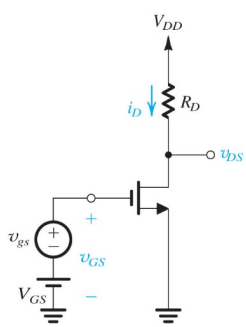

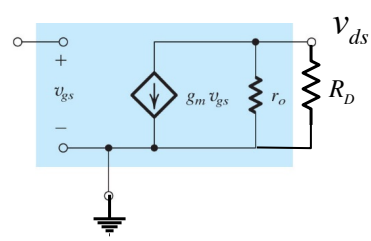

Previously, we used

$$v_{DS} = V_{DD} - \frac{1}{2}k_n\left(v_{GS} - V_t\right)^2 R_D$$

$$A_V = \left.\frac{dv_{DS}}{dv_{GS}}\right|_Q = -k_n\left(v_{GS} - V_t\right)R_D$$

Voltage Gain: $A_V = -k_n V_{OV} R_D$

With small-signal model, gain can be obtained much more easily:

$$v_{ds} = -g_m v_{gs}\left(r_o \parallel R_D\right)$$

$$A_V = \frac{v_{ds}}{v_{gs}} = -g_m\left(r_o \parallel R_D\right)$$

Usually $r_o >> R_D$, $A_V \approx -g_m R_D$

Small-Signal Model for BJT

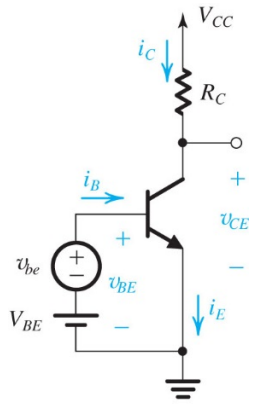

(a)

$$i_C(v_{BE}, v_{CE}) = I_S e^{\frac{v_{BE}}{V_T}}\left(1 + \frac{v_{CE}}{V_A}\right)$$

At DC bias point, Q

$$i_C = I_C + \left.\frac{\partial i_C}{\partial v_{BE}}\right|_Q v_{be} + \left.\frac{\partial i_C}{\partial v_{CE}}\right|_Q v_{ce}$$

$$i_D = I_D + g_m v_{gs} + \frac{1}{r_o} v_{ds}$$

Transconductance:

$$g_m = I_S e^{\frac{v_{BE}}{V_T}}\left(1 + \frac{v_{CE}}{V_A}\right)\frac{1}{V_T} = \frac{I_C}{V_T}$$

Output Resistance:

$$(r_o)^{-1} = I_S e^{\frac{v_{BE}}{V_T}}\frac{1}{V_A} = \frac{I_C}{V_A} \Rightarrow r_o = \frac{V_A}{I_C}$$

Hybrid-π Model for BJT

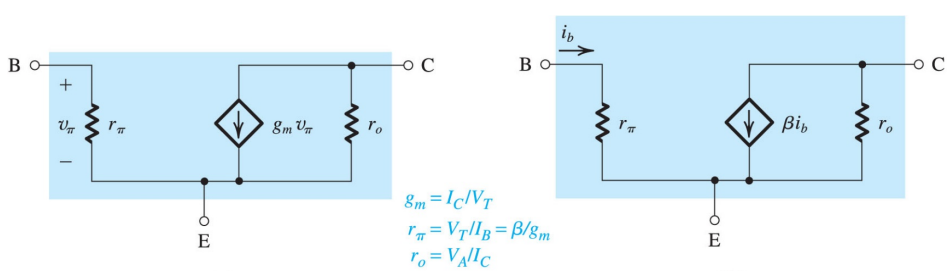

(a) (b)

$g_m = I_C/V_T$
$r_\pi = V_T/I_B = \beta/g_m$
$r_o = V_A/I_C$

Similar to MOSFET, but with finite base resistance:

$$i_B = \frac{i_C}{\beta}$$

Base-Emitter resistance

$$r_\pi = \frac{\partial v_{BE}}{\partial i_B} = \frac{\partial v_{BE}}{\partial i_C}\frac{\partial i_C}{\partial i_B} = \frac{\beta}{g_m}$$

Applying Small-Signal Model

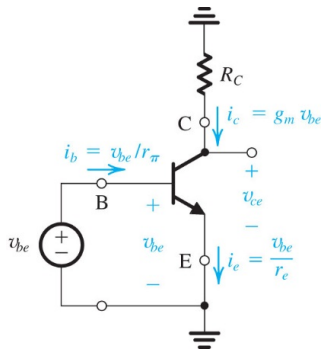

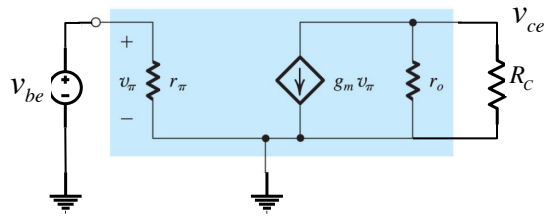

Previously, we used

$$v_o = v_{CE} = V_{CC} - i_C R_C$$

$$i_C = I_S e^{\frac{v_{BE}}{V_T}}$$

$$A_V = \left.\frac{dv_{CE}}{dv_{BE}}\right|_Q = -\left(\frac{I_C}{V_T}\right) R_C$$

With small-signal model, gain can be obtained much more easily:

$$v_{ce} = -g_m v_{be}\left(r_o \parallel R_C\right)$$

$$A_V = \frac{v_{ce}}{v_{be}} = -g_m\left(r_o \parallel R_C\right)$$

Usually $r_o >> R_C$, $A_V \approx -g_m R_C$

BJT Amplifier Example

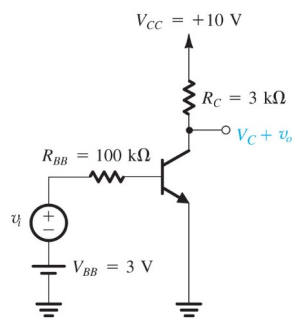

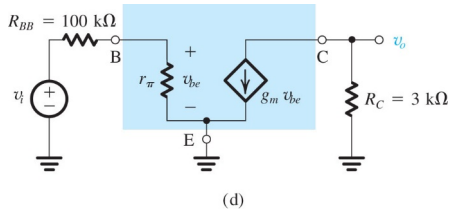

DC analysis (β=100, $V_A = \infty$)

$$V_{BB} = \frac{I_C}{\beta} R_{BB} + 0.7 \quad \Rightarrow \quad I_C = 2.3 \text{ mA}$$

$$g_m = \frac{I_C}{V_T} = 40 \times 2.3 = 92 \text{ mA/V (mS)}$$

$$r_o = \infty$$

$$r_\pi = \frac{\beta}{g_m} = 1.09 \text{ k}\Omega$$

AC analysis

$$A_V = \frac{r_\pi}{r_\pi + R_{BB}}\left(-g_m R_C\right)$$

$$A_V = -0.011 \times 92\text{mS} \times 3\text{k}\Omega = -3.04 \text{ V/V}$$

Systematic Procedure for Transistor Amplifier Analysis

1. Perform DC analysis (ignore small signal source)
2. Calculate small-signal parameters (g_m, r_π, r_o, etc)
3. Generate AC small-signal equivalent circuit
   - Replace DC voltage source by short circuit
   - Replace DC current source by open circuit
   - Replace transistor by hybrid-π model (or other model)
4. Perform circuit analysis to determine voltage gain or other amplifier performance parameters

MOSFET Amplifier Example: (1) Solve DC Bias Point

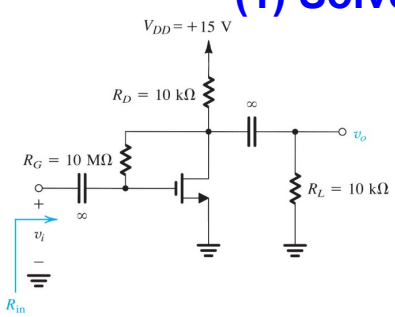

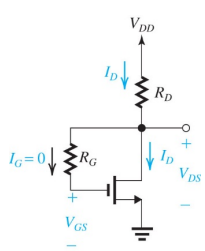

Find voltage gain for the amplifier. The MOSFET has V_t = 1.5V, k_n = 0.25 mA/V^2 and V_A = 50V

Coupling capacitor is open circuit in DC, and short circuit for AC signal.

To solve DC bias point, replace coupling capacitor with *V*open circuit:

$V_{GS} = V_{DS}$ from bias connection R_G

$$V_{DD} = I_D R_D + V_{DS} = \frac{k_n}{2}\left(V_{GS} - V_t\right)^2 R_D + V_{DS}$$

$$15 = 1.25\left(V_{DS} - 1.5\right)^2 + V_{DS}$$

Solve quadratic equation: $V_{DS} = 4.4V$

$I_D = 1.06$ mA

MOSFET Amplifier Example: (2) Solve AC Small Signal Circuit

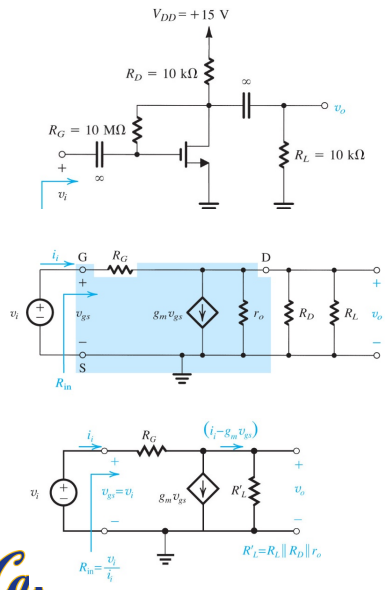

Now replace coupling capacitor with short circuit, and replace MOSFET with hybrid-pi model with

$$g_m = k_n V_{OV} = 0.25 \cdot (4.4 - 1.5) = 0.725 \text{ mA/V}$$

$$r_0 = \frac{V_A}{I_D} = 47 \text{ k}\Omega$$

Next, simpliy resistance at output to

$$R_L' = r_o \| R_D \| R_L = 4.5 \text{ k}\Omega$$

Do circuit analysis:

$$\begin{cases} v_o = (i_i - g_m v_{gs}) R_L' \\ i_i = \dfrac{v_i - v_o}{R_G} \end{cases}$$

$$A_v = -g_m R_L' \frac{1 - 1/g_m R_G}{1 + R_L'/R_G}$$

For large R_G, $A_v \approx -g_m R_L' = -0.725 * 4.5 = -3.3$ V/V

MOSFET Amplifier Example: (3) Additional Parameters of Interest

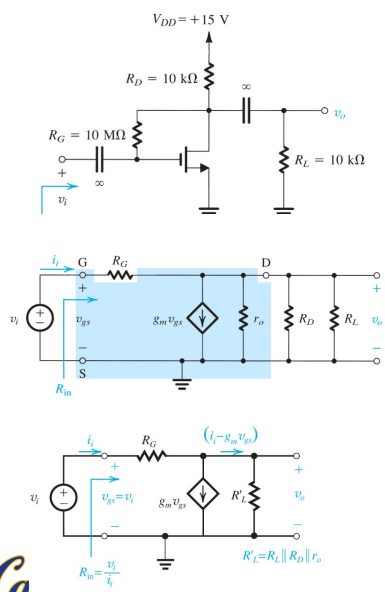

$$R_{in} = \frac{v_i}{i_i} = \frac{v_i}{\frac{v_i - v_o}{R_G}} = \frac{v_i}{\frac{v_i - A_v v_i}{R_G}} = \frac{R_G}{1 - A_v}$$

$$R_{in} = \frac{10 \text{ M}\Omega}{1 + 3.3} = 2.3 \text{ M}\Omega$$

Maximum signal that can be applied while keeping MOS in Saturation:

$$v_{DS\min} \geq v_{GS\max} - V$$

$$V_{DS} - |A_v| v_i \geq V_{GS} + v_i - V_t$$

$$v_i \leq \frac{V_{DS} - V_{GS} + V_t}{1 + |A_v|} = \frac{V_t}{1 + |A_v|}$$

$\because V_{DS} = V_{GS}$ here.

$$v_i \leq 0.35 \text{ V}$$

BJT Amplifier Example: (1) DC Bias Point:

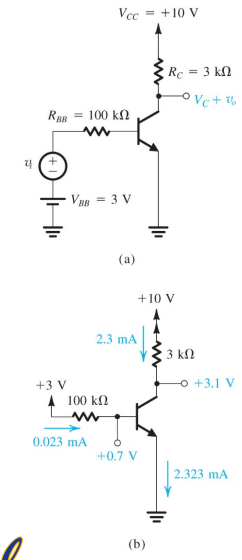

Find voltage gain for the amplifier.
Assume β = 100, and neglect Early effect.

Assume $V_{BE} = 0.7$ V

$$I_B = \frac{V_{BB} - V_{BE}}{R_{BB}} = \frac{3 - 0.7}{100k} = 0.023 \text{ mA}$$

$$I_C = \beta I_B = 2.3 \text{ mA}$$

$$V_{CE} = V_{CC} - I_C R_C = 10 - 2.3 * 3 = 3.1 \text{ V}$$

BJT Amplifier Example: (2) AC equivalent circuit:

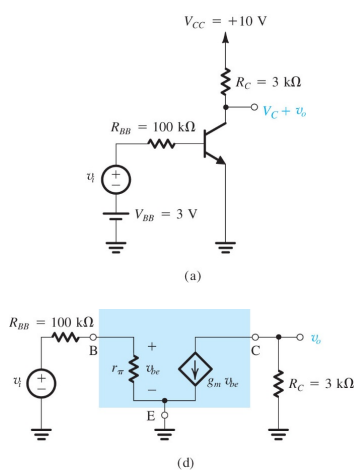

$$g_m = \frac{I_C}{V_T} = \frac{2.3 \text{ mA}}{25 \text{ mV}} = 92 \text{ mA/V}$$

$$r_\pi = \frac{\beta}{g_m} = 1.1 \text{ k}\Omega$$

$$A_v = -g_m R_C \frac{r_\pi}{R_{BB} + r_\pi} = -3.0 \text{ V/V}$$